Vehicle Safety Controller

Hardware Manual

Rugged Wireless Receiver with Dual Emergency Stop Inputs and Outputs, USB, RS232, and CAN Integration

The Vehicle Safety Controller (VSC) is a wireless safety module that integrates into your machine or vehicle. The VSC acts as the receiver for FORT's Wireless Emergency Stop and Safe Remote Control systems. It can also be configured as an emergency stop input, and emergency stop bridge, or as a wireless CAN bus bridge. The VSC and all FORT controllers implement FORT's proprietary safety technology to ensure consistent and reliable control.

1. Applications

- Control of remote, tele-operated, semi- or fully autonomous robotic systems where safety and usability are critical.
- Monitoring of fixed or mobile industrial systems requiring sophisticated control and reliable wireless emergency stop capabilities.

2. Key Features (Vehicle Safety Controller – VSC)

- Wireless communications
  - Frequency bands include 900 MHz (2+ km LOS), 2.4 GHz (200+ m LOS) (other bands available)
- USB, RS-232 serial, and CAN bus support for flexible system integration options
- Safety architecture for high reliability with no single point of safety failure
- Dual wired emergency stop loop with active diagnostics
  - Designed to meet ISO 13849 Category 3 Performance Level D 2015 Edition
- Master enable relay outputs for direct stop of motion control equipment
  - Internal Master enable fault detection
- 9 VDC to 36 VDC power input
- USB interface for programming and configuration
- -40°C to 70°C operation
- Multiple Connector Options
  - Sealed Mini-USB AB, Ecomate RM for Power, Estop I/O, RS232, or CAN interfaces, and RP-SMA antenna connector
  - MIL-DTL-38999 6 pin for USB, MIL-DTL-38999 19 pin for Power, Estop I/O, RS232, or CAN interfaces, and RP-SMA antenna connector
- IP66 (NEMA 4X) rated enclosure

3. Safety System

© 2021, FORT Robotics. Company Confidential. Do not distribute.

The safety system consists of major system-level technologies that work together to provide the integrator with the ability to design systems with consistent and reliable remote operations.

The VSC contains dedicated hardware that is monitoring its remote links, local safety inputs, local safety outputs, as well as its internal health. Dual highly-reliable programmable controllers run frequent diagnostics on themselves as well as their partner to ensure any internal or external faults are detected before a demand on the safety system occurs.

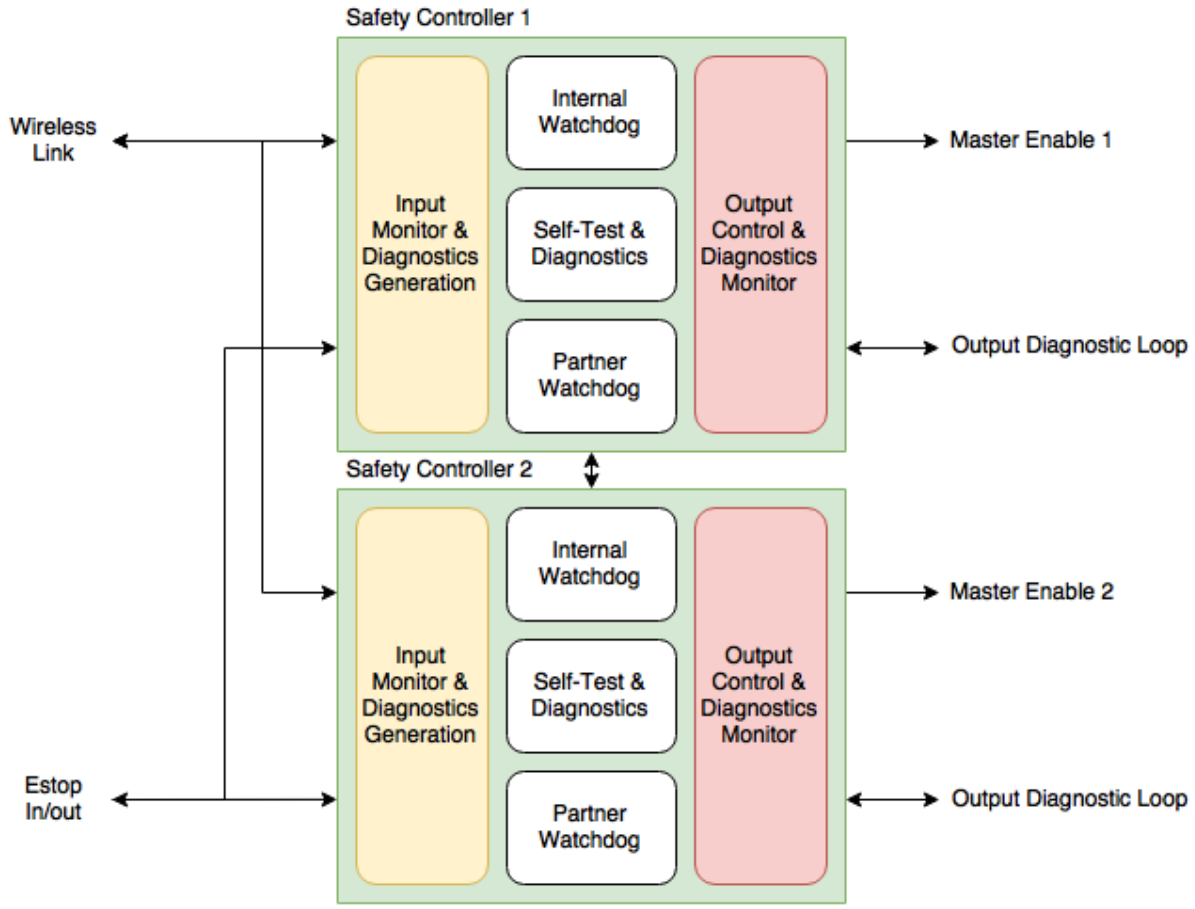

Figure 1 – Safety Architecture

The figure above illustrates the internal structure of the VSC. It is designed from the ground up to ensure that no single point of failure (hardware or software) exists that could cause an unsafe condition to not be caught and indicated by the Master Enable. It is important that system designers pay careful attention in the integration of the VSC with their drive system to ensure that motion will be prevented when the system de-asserts the Master Enable signals.

© 2021, FORT Robotics. Company Confidential. Do not distribute.

4. Specifications (Vehicle Safety Controller – VSC)

The Vehicle Safety Controller is an advanced receiver for several of FORT's wireless control and safety systems.

4.1. Absolute Maximum Ratings[1]

Please note that the GND pin, the USB ground, and the chassis are all connected internally and should be accounted for in your wiring and interface with the VSC.

Parameter	Minimum	Maximum	Unit
PVin	GND	42	V
Output Voltage	GND	PVin	V
MasterEnable 0 & 1 to Estop, PVin, GND or Data signals		1000	Vrms
Operational Temperature	-40	+70	°C
Storage Temperature	-40	+85	°C
Input Voltage	GND	PVin	V

1 – Stresses beyond those listed under absolute maximum ratings may cause permanent damage to the device. These are stress ratings only, and functional operation of the device at these or any other conditions beyond those indicated under *Recommended Operating Conditions* is not implied. Exposure to absolute-maximum-rated conditions for extended periods may affect device reliability.

Table 1 – Absolute Maximum Ratings

4.2. Recommended Operating Conditions

Parameter	Minimum	Typical	Maximum	Unit
PVin High Operating Voltage	9	12	36	V
PVin Input Power		1	8[1]	W
PVin Operating Current			1.5	A
MasterEnable 0 & 1 Output Voltage (AC)			250	VAC
MasterEnable 0 & 1 Output Voltage (DC)			50	VDC
MasterEnable 0 & 1 Current			4	A
EStopLoop 0 & 1 Output	GND		5	V
Estop 0 & 1 Input Voltage Maximum	GND		36	V
Estop 0 & 1 Input High Voltage	2.3			V
Estop 0 & 1 Input Low Voltage			1.0	V
LED 0-2 Voltage	GND		5	V
LED 0-2 Current			50	mA

1 – Maximum depends on primarily on RF power output.

Table 2 – Recommended Operating Conditions

4.3. Wireless Specifications

The VSC can be configured with several different radios based on frequency requirements and local regulatory compatibility. Prior to ordering and deployment, please consult your local regulations to ensure the proper radio is installed.

© 2021, FORT Robotics. Company Confidential. Do not distribute.

4.3.1. 902-928MHz North America ISM Radio (Radio Code -901)

Parameter	Minimum	Typical	Maximum	Unit
Transmit Power		140	1000[1]	mW
Receive Sensitivity	-107			dBm
Frequency	902		928	MHz
Channel Size		250		kHz
Number of Channels			105	
Error Detection		32 bit CRC		
Spread Spectrum		FHSS		

1 – Maximum depends on local regulations. Inquire for details.

Table 3 – 902-928 MHz North America Radio Specifications

4.3.2. 915-928MHz Australia & New Zealand ISM Radio (Radio Code -903)

NOTE: VSC Model 903 is Obsolete

Parameter	Minimum	Typical	Maximum	Unit
Transmit Power		140	1000[1]	mW
Receive Sensitivity	-108			dBm
Frequency	915		928	MHz
Channel Size		250		kHz
Number of Channels			52	
Error Detection		32 bit CRC		
Spread Spectrum		FHSS		

1 – Maximum depends on local regulations. Inquire for details.

Table 4 – 915-928MHz Australia & New Zealand Radio Specifications

4.3.3. 2.4GHz ISM Radio (Radio Code -2401)

Parameter	Minimum	Typical	Maximum	Unit
Transmit Power – 2.4GHz		100	500[1]	mW
Receive Sensitivity	-107			dBm
Frequency	2.4000		2.4835	GHz
Channel Size		250		kHz
Number of Channels			105	
Error Detection		32 bit CRC		
Spread Spectrum		FHSS		

1 – Maximum depends on local regulations. Inquire for details.

Table 5 – 2.4GHz Radio Specifications

© 2021, FORT Robotics. Company Confidential. Do not distribute.

4.4. Data Interfaces

The VSC's integration interface is USB, RS232, or CAN. The communication specifications (data rates and protocol) are described in the system user manual. The dual Master Enable outputs should be used to prevent any motion of the system under control when the VSC receives an emergency stop from either the connected remote device or its wired emergency stop input. The emergency stop inputs are relative to the PVin. A single ground reference should be maintained for all power and reverence voltages.

Parameter	Minimum	Typical	Maximum	Unit
CAN H/L Voltage	-2		7	V
CAN H/L baud rate	40	250	1000	kbps
CAN H/L high level input voltage	2			V
CAN H/L low level input voltage			0.8	V
CAN H/L high level output current - driver	-40			mA
CAN H/L high level output current - receiver	-8			mA
CAN H/L low level output current - driver			48	mA
CAN H/L low level output current - receiver			8	mA
CAN H/L positive going input threshold		750	900	mV
CAN H/L negative going input threshold	500	650		mV
CAN H/L input resistance	25	35	50	kΩ

Table 6 - CAN Interface Specifications

Note: CANbus installations require proper termination on the data lines (CAN_H & CAN_L) to ensure reliable operation. Termination is not included in the VSC

Parameter	Minimum	Typical	Maximum	Unit
RS232 TX high level output voltage	5	5.4		V
RS232 TX low level output voltage	-5	-5.4		V
RS232 RX high level output voltage	5	5.4		V
RS232 RX positive going input threshold		1.5	2.4	V
RS232 RX negative going input threshold	0.6	1.2		V
RS232 RX input resistance	3	5	8	kΩ
RS232 baud rate		115200		bps

Table 7 – RS232 Interface Specification

4.5. I/O Connector Pinout

The 19-pin I/O connector is where the majority of the system integration is done. Most applications will only need this connector, leaving 6-pin USB connector capped.

© 2021, FORT Robotics. Company Confidential. Do not distribute.

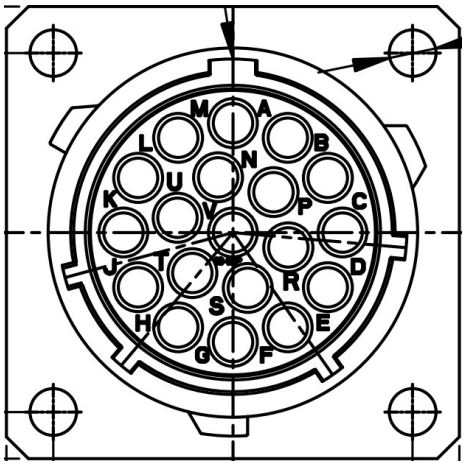

Figure 2 - VSC I/O connector pinout

NOTE: Connectors are designed to be hand tightened only. Use of a wrench or other tool will cause damage to the connector or cabling.

VSC-009 Pin	VSC-006 Pin	Signal Name	Type	Wire Color on Breakout	Description
A	A	MasterEnable0_COM	O	White/Blue	Master Enable 0 common
B	B	NA	NA		Reserved. Do Not Connect.
C	C	Estop_In_0	I	Brown	Estop loop input 0
D	D	Estop_In_1	I	Violet	Estop loop input 1
E	E	LED0	O	Gray	Status LED output. Refer to red LED behavior in user manual.
F	F	CAN_L	I/O	Yellow	CAN low data interface
G	G	CAN_H	I/O	Orange	CAN high data interface
H	H	MasterEnable1_COM	O	White/Black	Master Enable 1 common
J	J	RS-232_TX	O	White/Orange	RS-232 transmit data interface
K	K	RS-232_RX	I	White/Yellow	RS-232 receive data interface
L	L	Estop_Out_0	O	White/Brown	Estop 0 loop output. Connect to Estop In 0 through one or more normally closed emergency stop switches.
M	M	Estop_Out_1	O	White/Violet	Estop 1 loop output. Connect to Estop In 1 through one or more normally closed emergency stop switches.
N	N	MasterEnable1_NO	O	White	Normally open MasterEnable0 contact de-asserted = open = active estop condition asserted = closed (pulled low) = no estop condition
P	P	LED1	O	Pink	Status LED output. Refer to green LED behavior in user manual.
R	R	RS-485_P	I/O	White/Gray	Reserved for future use. Do Not Connect.
S	S	MasterEnable0_NO	O	Blue	Normally open system enable output de-asserted = open = active estop condition asserted = closed (pulled low) = no estop condition (run)
T	T	RS-485_N	I/O	White/Green	Reserved for future use. Do Not Connect.
U	U	PVin	NA	Red	Power input
V	V	GND	NA	Green	

Table 8 – VSC I/O connector pinout and signal descriptions

© 2021, FORT Robotics. Company Confidential. Do not distribute.

4.6. USB Connector Pinout

4.6.1. VSC-009 - 38999

The 6-pin USB connector is used primarily for configuration and firmware upgrades or system communication if the USB-CDC interface is utilized.

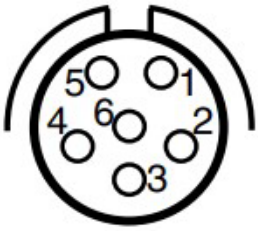

Figure 3 - VSC USB connector pin location

NOTE: Connectors are designed to be hand tightened only. Use of a wrench or other tool will cause damage to the connector or cabling.

Pin	Signal Name	Type	Description
1	+5V	Vcc	USB power input
2	NA	NA	Reserved. Do Not Connect.
3	NA	NA	Reserved. Do Not Connect.
4	USB D-	I/O	USB data negative differential signal
5	USB D+	I/O	USB data positive differential signal
6	GND	Vss	USB ground

Table 9 –VSC USB (VIC-004) connector pinout and signal descriptions

4.6.2. VSC-006 – USB Mini-AB

The standard USB Mini-AB connector is used primarily for configuration and firmware upgrades or system communication if the USB-CDC interface is utilized.

4.7. Mechanical Specifications

4.7.1. VSC-009 – 38999

Parameter	Minimum	Typical	Maximum	Unit
Ingress Protection	IP66[1]			
Weight		1.0		lbs
Antenna Connector		RP-SMA Female		
Data Connector		38999 Series III TV 6p (Amphenol part # D38999/24WA35PN)		
I/O Connector		38999 Series III TV 19p (Amphenol part # D38999/24WD19PN)		

1 – When connected or dustcap installed

Table 10 –VSC-009 Mechanical Specifications

© 2021, FORT Robotics. Company Confidential. Do not distribute.

4.7.2. VSC-006 – Ecomate RM

Parameter	Minimum	Typical	Maximum	Unit
Ingress Protection	IP66[1]			
Weight		1.0		lbs
Antenna Connector		RP-SMA Female		
Data Connector		USB Mini-AB		
I/O Connector		Amphenol Ecomate RM (Amphenol part # RTO01619PNH)		

1 – When data connector is connected

Table 11 – VSC-006 Mechanical Specifications

4.8. Mechanical Drawing

4.8.1. VSC-009 – 38999

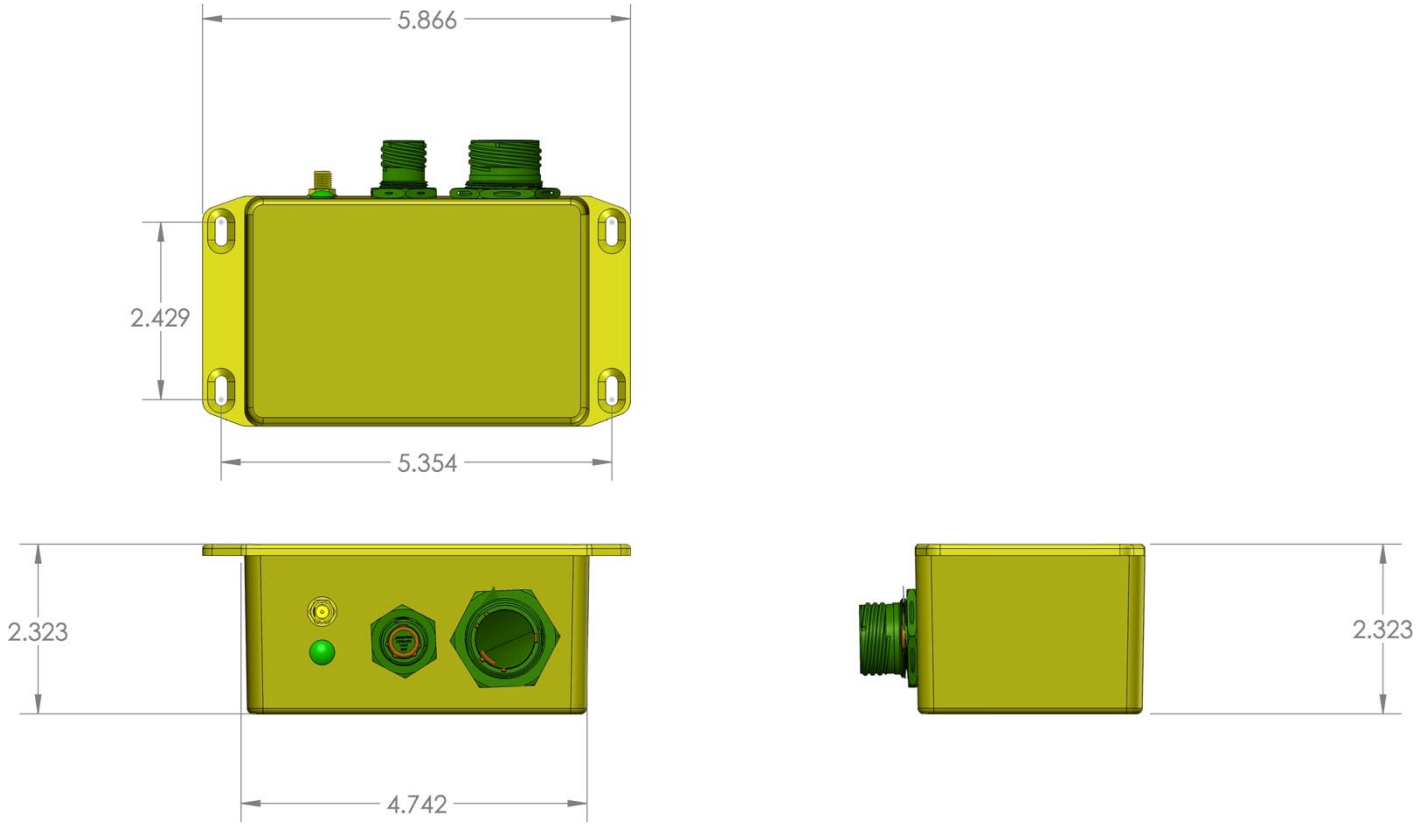

Figure 4 – VSC-009 Mechanical Drawing (All Dimensions in Inches)

© 2021, FORT Robotics. Company Confidential. Do not distribute.

4.8.2. VSC-006 – Ecomate RM

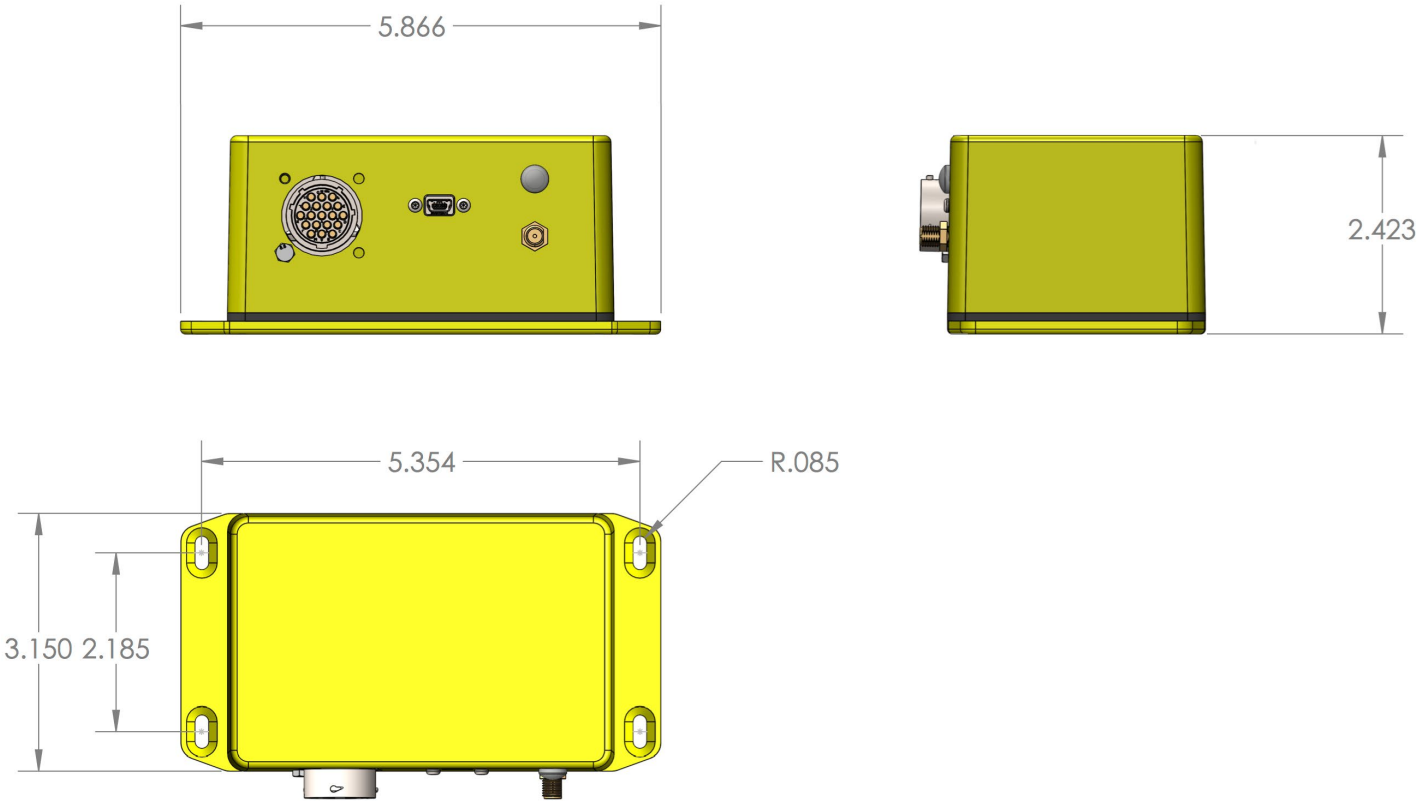

Figure 5 – VSC-006 Mechanical Drawing (all dimensions in inches)

© 2021, FORT Robotics. Company Confidential. Do not distribute.

5. Hardware Integration

The I/O cable described in section 4.5 provides the connections required for most integration into systems with a user computer, wired emergency stops, and utilizing the Master Enables.

Estop_In_0/Estop_out_0 and Estop_In_1/Estop_out_1 are intended to be connected as shown through a standard emergency stop switch. These signals are internally biased to their fault state, so if this wired safety input is not used it must be bypassed externally as shown below. It is critical that the Estop_In_0 and Estop_In_1 signals are treated properly. If one or both signals are treated improperly or left unconnected, the VSC will treat this as a fault condition and de-assert the Master Enable signals.

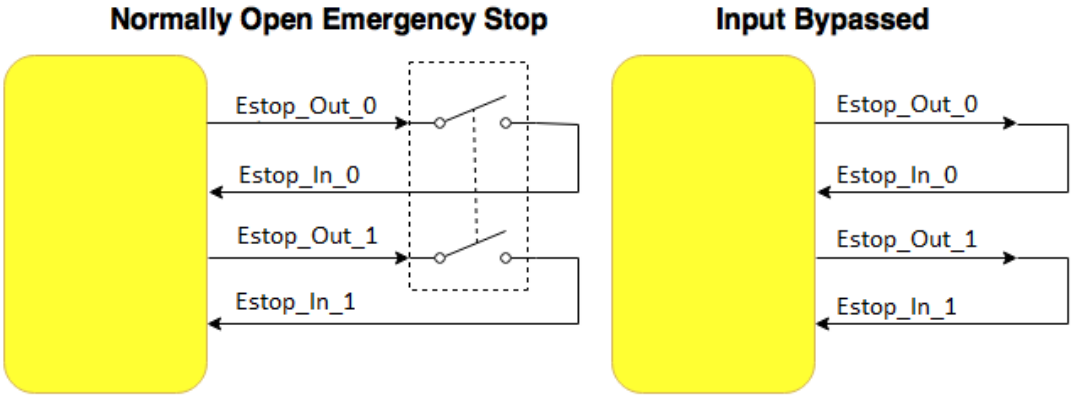

Figure 6 – Emergency Stop Input Wiring

Access to the internal safety relays are given through the MasterEnable_NO and MasterEnable_COM signals. One normally open contact of each of the two relays is provided for control of external loads (motors, contactors, or relays) or participation in an existing wired emergency stop loop. This architecture makes the VSC integrate similarly to an additional wired normally open emergency stop button.

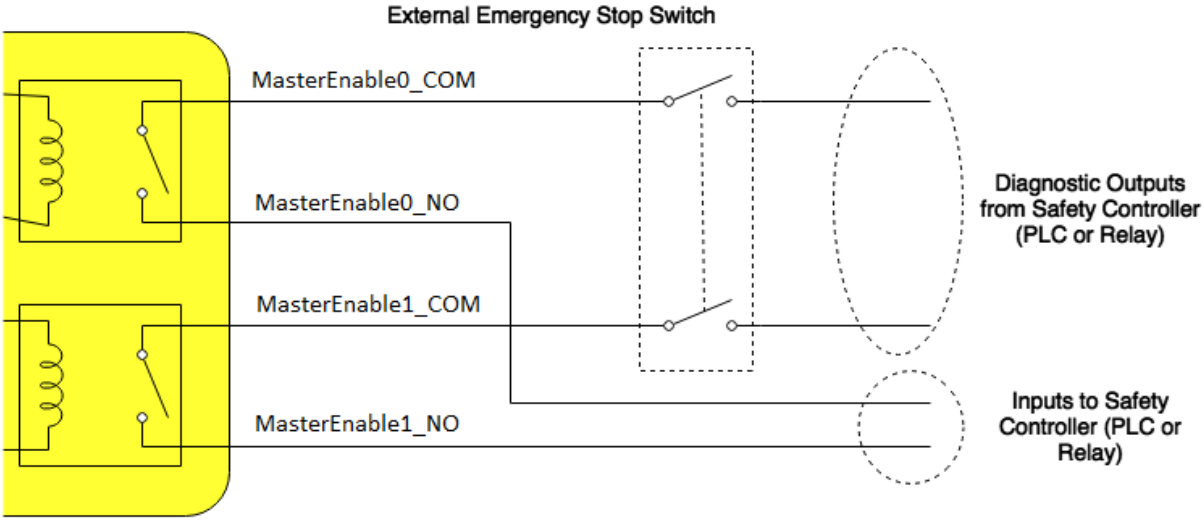

Figure 7– Master Enable Connection to Emergency Stop Loop

© 2021, FORT Robotics. Company Confidential. Do not distribute.

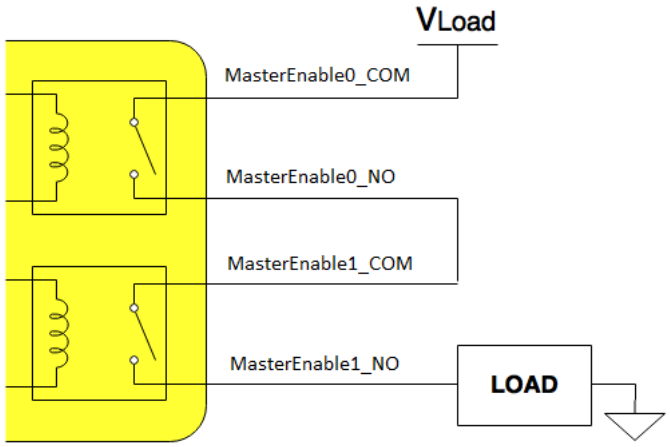

Figure 8– Master Enable Connection to External Load

6. Operation

All command and control communication to the VSC is over the USB, RS232, or CAN-based interfaces. The specific protocols for each are defined in detail below. The VSC also provides an Emergency Stop interface for hardware based emergency control. Two Master Enable (normally high, low asserted) outputs are provided. Two normally-closed Emergency Stop inputs are also provided, so the VSC can be connected to an existing Emergency Stop interface. If the Emergency Stop input is activated, the Master Enable signals are asserted immediately by VSC hardware.

The Safe Remote Control System has five modes while operating: Local, Remote, Operational, Menu, and Pause. The basic features of these modes are summarized in Table 12. The SRC features 6-axis control, 8 buttons, and an emergency stop but the joystick and button data are only available when the system is in operational mode as described below.

If a Wireless Emergency Stop or another Vehicle Safety Controller is paired to the primary VSC, then there will only be two possible modes while operating: Local and Operational. In this instance, joystick information will always be zeroed.

Mode	Value (Hex)	Heartbeat	Joysticks	Buttons
Local	0x04	Nominal / E-Stop Indicated	Zeroed	Zeroed
Remote	0x06	Nominal	Zeroed	Zeroed
Operational	0x09	Nominal	Active	Active
Menu	0x0A	Nominal	Zeroed	Zeroed
Pause	0x0B	Nominal	Zeroed	Zeroed

Table 12: VSC Modes of Operation

© 2021, FORT Robotics. Company Confidential. Do not distribute.

6.1. Local Mode

Local mode occurs in several cases. If the SRC is powered on, but cannot connect to a VSC, the LCD display will show it is in Searching Mode. This can occur if the VSC is not powered, or if the SRC is not in range to the VSC. The SRC display will look similar to the following in Searching Mode.

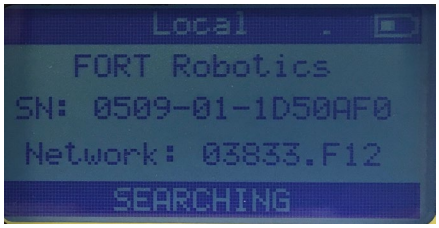

Figure 9: Local Mode

If the VSC is in Local mode, then it cannot connect to its paired device. This can occur if the paired device is not powered, or the paired device is not in range to the VSC, or because the Estop was triggered on the paired device. This is considered an unsafe operating condition because the operator cannot establish a communication link to the vehicle. When the VSC and the paired device are not connected, the VSC will continue to output the heartbeat message with an indication that the Emergency Stop is active because of the unsafe condition. The VSC will also continue to output the joystick message with all values set to 0 to guarantee no motion will occur. The Master Enable outputs from the VSC will also be asserted and can be used to prevent motion.

6.2. Remote Mode

Remote mode occurs when the SRC and the VSC first establish a connection. When in Remote mode, the VSC will continue to output the heartbeat message. The VSC will also continue to output the joystick message with all values set to 0 to guarantee no motion will occur until the user is ready. The VSC's Master Enable relay output from the VSC is energized providing a closed-circuit condition indicating a safe state. The SRC display will look like the following in Local Mode.

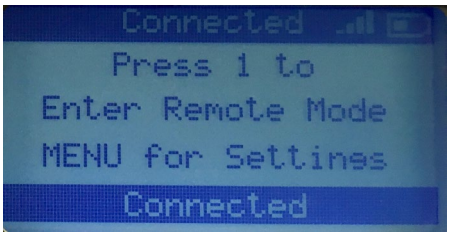

Figure 10: Remote Mode

6.3. Pause Mode

When in Pause Mode, the SRC and the VSC have established a communication link, however no motion is intended. The SRC display will look like the following in Pause Mode.

© 2021, FORT Robotics. Company Confidential. Do not distribute.

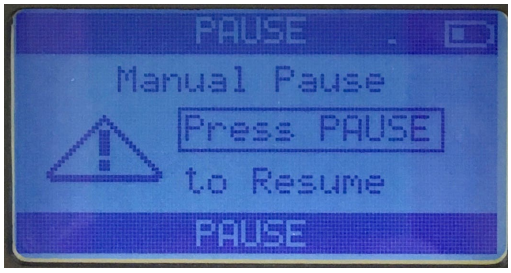

Figure 11: Pause Mode

Pause Mode will be entered upon any of the following conditions:

1) Whenever the Pause Button is pressed on the SRC
2) Upon any of the following triggers
    a. Orientation Detection
    b. Free-fall Detection
    c. Inactivity Timeout

If the VSC is in Pause Mode, the VSC will continue to output the heartbeat message with an indication that the system is in Pause Mode. The VSC's Master Enable relay is energized providing a closed-circuit condition indicating a safe state. The VSC will also continue to output the joystick message with all values set to 0 to guarantee no motion will occur.

6.4. Menu Mode

Menu Mode is used to modify system parameters on the SRC. When in Menu Mode, the SRC and the VSC have established a communication link, however no motion is intended. The SRC LCD display will show it is in Menu Mode.

If the VSC is in Menu Mode, the VSC will continue to output the heartbeat message with an indication that the system is in Menu Mode. The VSC will also continue to output the joystick message with all values set to 0 to guarantee no motion will occur. The VSC's Master Enable relay is energized providing a closed-circuit condition indicating a safe state.

Pressing the Menu Button on the SRC is the only way to enter Menu Mode. The SRC display will look similar to the following in Menu Mode.

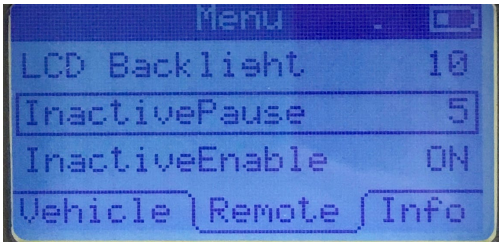

Figure 12: Menu Mode

© 2021, FORT Robotics. Company Confidential. Do not distribute.

There are three tabs in the menu display, from left to right: Vehicle, Remote, and Info. The Vehicle menu tab displays the 9 user values that can be updated through the VSC interface. The Remote menu tab contains setting specific to the SRC as shown below. The Info menu tab displays related information pertaining to the system, including battery life, software version information, and network ID.

Menu Item	Description	Values
LCD Contrast	Controls the contrast setting on the LCD screen.	0 - 16
LCD Backlight	Controls the backlight setting on the LCD screen. When set to 0, the backlight is disabled.	0 - 16
InactivePause	Controls the time before the SRC goes into Pause Mode because of an Inactivity Timeout. The time before going into Pause Mode is the InactiveTime + 1 in minutes.	0 - 10
AutoOffEnable	Controls whether or not the SRC will automatically power off after being inactive for 2 minutes after going into Pause Mode because of an Inactivity Timeout.	ON – OFF

Table 13: Menu Options

6.5. Operational Mode

Operational Mode is the only state where motion is allowed in the system. When in Operational Mode, the VSC and its paired device have established a communication link, and motion is intended. The SRC LCD display will show it is in Operational Mode. At this point, all joystick movement, and button presses on the SRC will be output from the VSC. The VSC's Master Enable relay is energized providing a closed-circuit condition indicating a safe state. For configurations without an SRC the joystick messages will be available but will always be zeroed.

If the VSC is in Operational Mode, the VSC will output the heartbeat message with an indication that the system is operational and the VSC will output the joystick message with all values reflective of commands on the SRC.

When in Operational Mode, the SRC display has four available modes that are configurable via a feedback key from the API. The default display mode shows data from the GPS module on the SRC including UTC time, Latitude and Longitude. The second display mode allows the user to display four 20-character lines of text using the feedback string functions in the API. These text lines can be updated every 250ms allowing the user to update the entire display once per second if desired. The third display mode will display the first four user defined keys with both the custom text and value. The last display mode will display the first eight user defined keys with only the value updating. For more information regarding custom display updates, refer to the API definition and the example code. The SRC display will look similar to the following in the default Operational Mode.

6.6. Master Enables

The Master Enable output relays are open-circuit when the system determines that an unsafe condition exists. The LCD display on the SRC will show that the E-Stop is asserted as shown below.

© 2021, FORT Robotics. Company Confidential. Do not distribute.

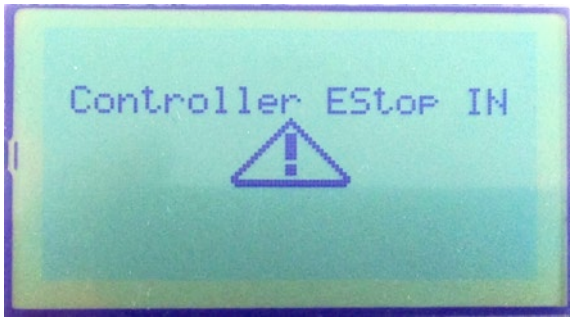

Figure 13: SRC Emergency Stop Display

The Master Enables will be de-asserted upon the following conditions:

1) The Emergency Stop Button on the SRC is activated.
2) The External Emergency Stop Input on the VSC is activated.
3) The Emergency Stop Software Input on the VSC is activated.
4) The VSC loses its connection to the SRC.

If the VSC has Master Enable indication asserted, this is considered an unsafe operating condition. It will continue to output the heartbeat message with an indication that the Emergency Stop is active because of the unsafe condition but will return to local mode or searching mode as specified. The VSC will also continue to output the joystick message with all values set to 0 to guarantee no motion will occur. The Master Enable outputs from the VSC will also be de-asserted and should be used to prevent motion.

The Master Enable outputs will only be asserted once the unsafe condition has been acknowledged and corrected. The system will always revert to Local Mode after an E-Stop condition has occurred.

6.7. VSC LED

The VSC LED indicator is tied to the state of the master enable of the VSC and the connection state of the paired device to the VSC.

LED State	SRCS State
Blinking Amber	VSC in bootloader mode
Solid Red	Paired device is not connected or is in estop mode
Blinking Red	Paired device is connected and VSC estop enabled
Blinking Green	Paired device is connected and no estops enabled

Table 14: VSC LED States

© 2021, FORT Robotics. Company Confidential. Do not distribute.

7. Interfacing using FORT Packet Protocol (USB / RS232)

The command and control communication to the VSC is over the RS232 and USB->Serial interface in the FORT Packet Protocol. The serial format is fixed at 8 data bits, 1 stop bit and no parity with a baud rate of 115200. The VSC USB interface is implemented as a CDC device and on most operating systems it will show up as a serial port (*/dev/tty.usbserial*, */dev/ttyACM0*, etc). The example shows to how provide heartbeat and feedback messages to the VSC while receiving joystick, heartbeat and GPS messages from the VSC. The FORT Packet Protocol is a binary protocol designed with error checking, high efficiency and has a well-defined specification. It is used for all communications between the user and the VSC.

7.1. Data Types

Mode	Size
uint8	0x01
int8	0x01
uint16	0x02
int16	0x02
uint32	0x04
int32	0x04

Table 15: Packet Protocol Data Types

7.2. Packet Structure

Byte Offset	Type	Size	Description
0	uint16	2	Header
2	uint8	1	Message Type
3	uint8	1	Message Length (Size of variable data)
4	Variable	N	Data Packet
N+4	uint16	2	16-Bit Checksum

Table 16: Packet Protocol Structure

7.3. Message Types

The FORT packet protocol contains all of the messages below. The timing of each message that is output from the VSC can be configured using the “Message Control” packet. The default values for the frequency of the messages are shown below.

Type	Description	Direction	Enabled	Frequency
0x10	Joystick	From VSC	Yes	50 Hz
0x12	SRC GPS	From VSC	Yes	~1 Hz
0x20	Heartbeat	From VSC	Yes	20 Hz
0x22	Remote Status	From VSC	No	1 Hz
0x21	Heartbeat	To VSC		20 Hz
0x23	Message Control	To VSC		Aperiodic
0x30	User Feedback Set	To/From VSC	Yes	Aperiodic (Max rate 20 Hz)
0x31	User Feedback Name String	To VSC		Aperiodic (Should be sent Once, Max rate 4 Hz)
0x32	User Feedback Get	To VSC		Aperiodic (Max rate 20 Hz)

Table 17: Packet Protocol Message Types

© 2021, FORT Robotics. Company Confidential. Do not distribute.

7.3.1. Joystick Message (From VSC)

The joystick message from the SRC includes all 6 axes as well as both D-Pads.

Byte Offset	Type	Size	Description	Value
0	uint16	2	Header	0x1001
2	uint8	1	Message Type	0x10
3	uint8	1	Message Length	0x0E
4	uint16	2	Left X Joystick Value	See Joystick Reference
6	uint16	2	Left Y Joystick Value	See Joystick Reference
8	uint16	2	Left Z Joystick Value	See Joystick Reference
10	uint16	2	Right X Joystick Value	See Joystick Reference
12	uint16	2	Right Y Joystick Value	See Joystick Reference
14	uint16	2	Right Z Joystick Value	See Joystick Reference
16	uint8	1	Left Button Values	See Button Reference
17	uint8	1	Right Button Values	See Button Reference
18	uint16	2	16-Bit Checksum	See Checksum Reference

Table 18: Packet Protocol Joystick Message

7.3.2. Heartbeat Message (From VSC)

The heartbeat message from the VSC contains the Emergency Stop indication as well as the current system state.

Byte Offset	Type	Size	Description	Value
0	uint16	2	Header	0x1001
2	uint8	1	Message Type	0x20
3	uint8	1	Message Length	0x06
4	uint8	1	VSC Mode	See state definitions
5	uint8	1	Autonomy Mode	0: User Control 1: Shared Control 2: Autonomous Control
6	uint32	4	E-Stop indication	0 = OK >0 = E-Stop Active (Each bit represents an E-Stop)
10	uint16	2	16-Bit Checksum	See Checksum Reference

Table 19: Packet Protocol Heartbeat Message (From VSC)

7.3.3. Remote Status Message (From VSC)

The Remote Status message from the VSC contains key information pertaining to the connected remote and the status of the link between the VSC and the remote. *NOTE: These values are not cleared when a connection is lost to the remote device. Make sure to use the state in the heartbeat message to indicate whether or not a remote device is connected*.

© 2021, FORT Robotics. Company Confidential. Do not distribute.

Byte Offset	Type	Size	Description	Value
0	uint16	2	Header	0x1001
2	uint8	1	Message Type	0x22
3	uint8	1	Message Length	0x06
4	uint8	1	Battery Level	Percentage of battery remaining in 10% increments (0-100%)
5	uint8	1	Battery Charging	0 = Not Charging, 1 = Charging
6	uint8	1	Connection Strength (as perceived by VSC)	0 = Low Connection Strength (intermittent messages, could be disconnected) 1 = Medium Strength 2 = High Strength
7	uint8	1	Connection Strength (as perceived by SRC)	Reserved for future use, currently mirrors connection strength as perceived by VSC
8	uint8	1	Reserved	Reserved for future use
9	uint8	1	Reserved	Reserved for future use
10	uint16	2	16-Bit Checksum	See Checksum Reference

Table 20: Packet Protocol Heartbeat Message (From VSC)

7.3.4. Heartbeat Message (To VSC)

The heartbeat message to the VSC contains the Emergency Stop indication from the user. If the User E-STOP Timeout Key is set, the VSC will use this message as a watchdog for the user computer as well. It will indicate an Emergency Stop condition if the user does not periodically send this message (after a 500ms timeout). **This message is reliant on the Application Layer and is therefore not safety rated.**

Byte Offset	Type	Size	Description	Value
0	uint16	2	Header	0x1001
2	uint8	1	Message Type	0x21
3	uint8	1	Message Length	0x01
4	uint8	1	E-Stop indication	0 = OK >0 = E-Stop Active
5	uint16	2	16-Bit Checksum	See Checksum Reference

Table 21: Packet Protocol Heartbeat Message (To VSC)

© 2021, FORT Robotics. Company Confidential. Do not distribute.

7.3.5. Message Control Message (To VSC)

The Message Control message to the VSC allows the user to configure which messages are output from the VSC, and how often. The enabled field determines whether or not the message is transmitted. And the interval is defined as the number of milliseconds between transmissions of the message. All of these settings are persistent in EEPROM, so they only need to be configured once by the user. *NOTE: It is not recommended to disable the heartbeat or joystick messages from the VSC*.

Byte Offset	Type	Size	Description	Value
0	uint16	2	Header	0x1001
2	uint8	1	Message Type	0x23
3	uint8	1	Message Length	0x04
4	uint8	1	Message Type	Which VSC message type to modify
5	uint8	1	Enabled	Whether or not the message is transmitted.
6	uint16	2	Interval	Time between transmissions in milliseconds (20 -> UINT16_MAX)
8	uint16	2	16-Bit Checksum	See Checksum Reference

Table22: Packet Protocol Heartbeat Message (To VSC)

7.3.6. User Feedback Set Message (To VSC)

The User Feedback message to the VSC allows the user to update values that can be displayed on the SRC. Note, even though this message uses a 32-bit into to transmit data, the SRC can only display 6 characters of information (it is capable of displaying all values in the range of a 16-bit integer). Anything out of range will result in a “XXXXXX” to be displayed.

Byte Offset	Type	Size	Description	Value
0	uint16	2	Header	0x1001
2	uint8	1	Message Type	0x30
3	uint8	1	Message Length	0x05
4	uint8	1	User Feedback Key	0-99
5	int32	4	User Feedback Value	
7	uint16	2	16-Bit Checksum	See Checksum Reference

Table 23: Packet Protocol User Feedback Message

The following keys are currently defined by the system.

Key	Name	Description
1– 9	User Values	These 9 keys are allocated to custom user values that can be displayed on the LCD screen. These values should be limited to 16-bit values.
10	Left Vibratory Motor Control	Setting this value to 1 will drive the vibratory motor on the left side of the SRC for a small period of time (750ms).
11	Right Vibratory Motor Control	Setting this value to 1 will drive the vibratory motor on the right side of the SRC for a small period of time (750ms).
12	Vibratory Motor Control	Setting this value to 1 will drive both of the vibratory motors of the SRC for a small period of time (750ms).
80	Inactivity Pause	Controls the time before the SRC goes into Pause Mode because of an Inactivity Timeout. The time before going into Pause Mode is the InactiveTime + 1 in minutes. Valid Values: 0 - 10

© 2021, FORT Robotics. Company Confidential. Do not distribute.

81	Auto Off Enable	Enables the feature of the SRC to go power-off after 2 minutes past an inactivity timeout. 0 = Disabled 1 = Enabled (default)
82	Orientation Pause Enable	Enables the feature of the SRC to go into Pause Mode because of an Orientation Fault detected. 0 = Disabled 1 = Enabled (default)
83	Free-fall Pause Enable	Enables the feature of the SRC to go into Pause Mode because of a Free-fall fault detected. 0 = Disabled 1 = Enabled (default)
84	Inactivity Pause Enable	Enables the feature of the SRC to go into Pause Mode because of an inactivity timeout. 0 = Disabled 1 = Enabled (default)
85	User E-STOP Timeout	Enables the feature of the VSC to enable the watchdog connection to the user computer. If the user computer doesn't continuously transmit heartbeat messages to the VSC, it will indicate an E-STOP condition. (This item is persistent and only needs to be sent once) 0 = Disabled (default) 1 = Enabled
99	Display Mode	0 = Default Display Mode 1 = User Text Display Mode (4 Lines) 2 = User Key Value / Text Display Mode (4 Values w/ Text) 3 = User Key Display Mode (8 Values)

Table 24: User Feedback Keys

7.3.7. User Feedback Get Message (To VSC)

The User Feedback Get message to the VSC allows the user to query keys and feedback values from the system. When a valid key is requested, the VSC will queue a User Feedback Set Message back to the user with the requested key/value pair.

Byte Offset	Type	Size	Description	Value
0	uint16	2	Header	0x1001
2	uint8	1	Message Type	0x32
3	uint8	1	Message Length	0x01
4	uint8	1	User Feedback Key	0-99
5	uint16	2	16-Bit Checksum	See Checksum Reference

Table 25: Packet Protocol User Feedback Message

7.3.8. User Feedback Message (From VSC)

The User Feedback message from the VSC allows the user to update values in Menu Mode on the SRC that can then be fed back to the control software.

© 2021, FORT Robotics. Company Confidential. Do not distribute.

Byte Offset	Type	Size	Description	Value
0	uint16	2	Header	0x1001
2	uint8	1	Message Type	0x30
3	uint8	1	Message Length	0x05
4	uint8	1	User Feedback Key	0-99
5	int32	4	User Feedback Value	
7	uint16	2	16-Bit Checksum	See Checksum Reference

Table 26: Packet Protocol User Feedback Message

The following keys are currently defined by the system.

Key	Name	Description
1– 9	User Values	These 9 keys are allocated to custom user values that can be displayed on the LCD screen. These values should be limited to 16-bit values.

Table 27: User Feedback Keys

7.3.9. User Feedback Name String Message (To VSC)

The User Feedback message to the VSC allows the user to update the displayed name of the user feedback fields. This message should be sent once during system initialization.

Byte Offset	Type	Size	Description	Value
0	uint16	2	Header	0x1001
2	uint8	1	Message Type	0x31
3	uint8	1	Message Length	0x15
4	uint8	1	User Feedback Key	0-99
5	uint8	20	User Key String	Up to 20 characters to be displayed
7	uint16	2	16-Bit Checksum	See Checksum Reference

Table 28: Packet Protocol User Feedback Message

The following keys are currently defined by the system for user strings.

Key	Name	Description
1– 9	User Values	These 9 keys are allocated to custom user values that can be displayed on the LCD screen. Each value has a corresponding text string name.
90	Custom Display Text Line 1	In display mode 1, this is the first line of custom text that is displayed.
91	Custom Display Text Line 2	In display mode 1, this is the second line of custom text that is displayed.
92	Custom Display Text Line 3	In display mode 1, this is the third line of custom text that is displayed.
93	Custom Display Text Line 4	In display mode 1, this is the fourth line of custom text that is displayed.

Table 29: User Feedback String Keys

© 2021, FORT Robotics. Company Confidential. Do not distribute.

7.4. Joystick Reference

The SRC is a 6-axis controller with three on each hand. The X axis and Y axis are mapped to the thumb stick on top of the SRC, while the Z axis is mapped to the finger stick underneath.

Figure 14: SRC Joystick Axis Reference

Byte	Bits							
Byte	Bit 7	Bit 6	Bit 5	Bit 4	Bit 3	Bit 2	Bit 1	Bit 0
0	Axis Magnitude LSB's		Positive Status		Negative Status		Neutral Status	
1	Axis Magnitude MSB's							

Table 30: Packet Protocol Joystick Reference

Status	Definition
0x00	Not Set
0x01	Set
0x10	Error
0x11	Unavailable

Table 31: Packet Protocol Joystick Status Reference

7.5. Button Reference

The Buttons on the SRC are configured in a diamond. The buttons are referenced as those shown below on the left hand side of the controller: Up, Down, Left, Right.

© 2021, FORT Robotics. Company Confidential. Do not distribute.

Figure 15: SRC Joystick Button Reference

Byte	Bits							
Byte	Bit 7	Bit 6	Bit 5	Bit 4	Bit 3	Bit 2	Bit 1	Bit 0
0	Left Status		Up Status		Right Status		Down Status	

Table 32: SRC Joystick Button Reference

Status	Definition
0x00	Not Set
0x01	Set
0x10	Error
0x11	Unavailable

Table 33: SRC Joystick Button Status Reference

7.6. 16-bit Checksum Reference

The 16-bit Checksum used is a variation of the Fletcher 16 checksum for computing a position-dependent checksum devised by John G. Fletcher at Lawrence Livermore Labs in the late 1970s. The objective of the Fletcher checksum was to provide error-detection properties approaching those of a cyclic redundancy check but with the lower computational effort associated with summation techniques. The algorithm to calculate the checksum is shown below.

```
uint16_t checksum16( uint8_t* data, int count )
{
  uint16_t sum1 = 0;
  uint16_t sum2 = 0;
  int index;

  for( index = 0; index < count; ++index )
  {
    sum1 = (sum1 + data[index]) & 255;
    sum2 = (sum2 + sum1) & 255;
  }

  return (sum2 << 8) | sum1;
}
```

Figure 16: Checksum Reference

© 2021, FORT Robotics. Company Confidential. Do not distribute.

8. Interfacing using CAN-J1939 Protocol

The CAN Protocol is a binary protocol whose output is designed to be compatible with the J1939 specification. It is used for all communications between the user and the VSC. This section details the message structure that will be coming from the VSC and required by the VSC to communicate properly. Please note that it does not support address claiming.

8.1. Packet Structure

The SRCS uses the SAE J1939 basic joystick message to transfer information about the measured status of the X, Y and Z-axis of a joystick, and the state of buttons. The SRCS uses custom SAE J1939 messages to transfer the heartbeat and key-value pair information.

8.2. Message Types

The CAN IDs in the table below can be changed using the FORT Configuration Tool.

Type	Description	Direction	Frequency
0x0CFD D633	Left Joystick - J1939 Basic Joystick Message 1	From VSC	~16 Hz
0x0CFD D733	Left Joystick - J1939 Extended Joystick Message 1	From VSC	~16 Hz
0x0CFD D834	Right Joystick - J1939 Basic Joystick Message 2	From VSC	~16 Hz
0x0CFD D934	Right Joystick - J1939 Extended Joystick Message 2	From VSC	~16 Hz
0x0CFD E801	Heartbeat - J1939 Custom Message	From VSC	10 Hz
0x0CFD E861	Remote Status - J1939 Custom Message	From VSC	1 Hz
0x0CFD E900	User Feedback Value - J1939 Custom Message	To VSC	Aperiodic (Max rate 10 Hz)
0x0CFD EA00	User Feedback String - J1939 Custom Message	To VSC	Aperiodic (Max rate 10 Hz)

Table 34: Message Types

8.2.1. Left Joystick - J1939 Basic Joystick Message 1 (From VSC)

The joystick message from the SRC includes the 2 primary axes (X, Y) as well as the 4-button D-Pad.

Byte Offset	Size	Description	Value
0	2	Left X Joystick Value	See Joystick Reference
2	2	Left Y Joystick Value	See Joystick Reference
4	1	Unused	0xFF
5	1	Left Button Values	See Button Reference
6	1	Unused	0xFF
7	1	Unused	0xFF

Table 35: Left Joystick J1939 Basic Joystick Message 1

8.2.2. Left Joystick - J1939 Extended Joystick Message 1 (From VSC)

The joystick message from the SRC includes the third axis (Z).

Byte Offset	Size	Description	Value
0	2	Left Z Joystick Value	See Joystick Reference
2	6	Unused	0xFFFF FFFFFFFF

Table 36: Left Joystick J1939 Extended Joystick Message 1

© 2021, FORT Robotics. Company Confidential. Do not distribute.

8.2.3. Right Joystick - J1939 Basic Joystick Message 2 (From VSC)

The joystick message from the SRC includes the 2 primary axes (X, Y) as well as the 4-button D-Pad.

Byte Offset	Size	Description	Value
0	2	Right X Joystick Value	See Joystick Reference
2	2	Right Y Joystick Value	See Joystick Reference
4	1	Unused	0xFF
5	1	Right Button Values	See Button Reference
6	1	Unused	0xFF
7	1	Unused	0xFF

Table 37: Right Joystick J1939 Basic Joystick Message 2

8.2.4. Right Joystick - J1939 Extended Joystick Message 2 (From VSC)

The joystick message from the SRC includes the third axis (Z).

Byte Offset	Size	Description	Value
0	2	Right Z Joystick Value	See Joystick Reference
2	6	Unused	0xFFFF FFFFFFFF

Table 38: Right Joystick J1939 Extended Joystick Message 2

8.2.5. Remote Status Message (From VSC)

The Remote Status message from the VSC contains key information pertaining to the connected remote and the status of the link between the VSC and the remote. *NOTE: These values are not cleared when a connection is lost to the remote device. Make sure to use the state in the heartbeat message to indicate whether or not a remote device is connected*.

Byte Offset	Size	Description	Value
0	1	Battery Level	Percentage of battery remaining in 10% increments (0-100%)
1	1	Battery Charging	0 = Not Charging, 1 = Charging
2	1	Connection Strength (as perceived by VSC)	0 = Low Connection Strength (intermittent messages, could be disconnected) 1 = Medium Strength 2 = High Strength
3	1	Connection Strength (as perceived by SRC)	Reserved for future use, currently mirrors connection strength as perceived by VSC
4	1	Reserved	Reserved for future use
5	1	Reserved	Reserved for future use
6	2	Reserved	Always 00

Table 39: Remote Status J1939 Custom Message (From VSC)

© 2021, FORT Robotics. Company Confidential. Do not distribute.

8.2.6. Heartbeat Message (From VSC)

The heartbeat message from the VSC contains the Emergency Stop indication as well as the current system state.

Byte Offset	Size	Description	Value
0	1	VSC Mode	See state definitions
1	1	Autonomy Mode	0: User Control 1: Shared Control 2: Autonomous Control
2	4	E-Stop indication	0 = OK >0 = E-Stop Active (Each bit represents an E-Stop)

Table 40: Heartbeat Message (From VSC)

8.2.7. User Feedback Value Message (To VSC)

The User Feedback message to the VSC allows the user to update values that can be displayed on the SRC. Note, even though this message uses a 32-bit into to transmit data, the SRC can only display 6 characters of information (it is capable of displaying all values in the range of a 16-bit integer). Anything out of range will result in a "XXXXXX" to be displayed.

Byte Offset	Size	Description	Value
0	1	User Feedback Key	0-99
1	4	User Feedback Value	

Table 41: Packet Protocol User Feedback Message

The following keys are currently defined by the system.

Key	Name	Description
1– 9	User Values	These 9 keys are allocated to custom user values that can be displayed on the LCD screen. These values should be limited to 16-bit values.
10	Left Vibratory Motor Control	Setting this value to 1 will drive the vibratory motor on the left side of the SRC for a small period of time (750ms).
11	Right Vibratory Motor Control	Setting this value to 1 will drive the vibratory motor on the right side of the SRC for a small period of time (750ms).
12	Vibratory Motor Control	Setting this value to 1 will drive both of the vibratory motors of the SRC for a small period of time (750ms).
80	Inactivity Pause	Controls the time before the SRC goes into Pause Mode because of an Inactivity Timeout. The time before going into Pause Mode is the InactiveTime + 1 in minutes. Valid Values: 0 - 10
81	Auto Off Enable	Enables the feature of the SRC to go power-off after 2 minutes past an inactivity timeout. 0 = Disabled 1 = Enabled (default)
82	Orientation Pause Enable	Enables the feature of the SRC to go into Pause Mode because of an Orientation Fault detected. 0 = Disabled 1 = Enabled (default)

© 2021, FORT Robotics. Company Confidential. Do not distribute.

83	Free-fall Pause Enable	Enables the feature of the SRC to go into Pause Mode because of a Free-fall fault detected. 0 = Disabled 1 = Enabled (default)
81	Inactivity Pause Enable	Enables the feature of the SRC to go into Pause Mode because of an inactivity timeout. 0 = Disabled 1 = Enabled (default)
99	Display Mode	0 = Default Display Mode 1 = User Text Display Mode (4 Lines) 2 = User Key Value / Text Display Mode (4 Values w/ Text) 3 = User Key Display Mode (8 Values)

Table 42: User Feedback Keys

8.2.8. User Feedback String Message (To VSC)

The User Feedback String message to the VSC allows the user to update the displayed name of the user feedback fields. The feedback string is built using 3 segments of 6 characters to build an 18-character string. The full string is combined on the VSC and sent to SRC once the third segment is sent.

Byte Offset	Size	Description	Value
0	1	User Feedback Key	0-99
1	1	Segment	0-2
2	6	User Feedback String	6 ASCII Characters

Table 43: Packet Protocol User Feedback Message

The following keys are currently defined by the system for user strings.

Key	Name	Description
1– 9	User Values	These 9 keys are allocated to custom user values that can be displayed on the LCD screen. Each value has a corresponding text string name.
90	Custom Display Text Line 1	In display mode 1, this is the first line of custom text that is displayed.
91	Custom Display Text Line 2	In display mode 1, this is the second line of custom text that is displayed.
92	Custom Display Text Line 3	In display mode 1, this is the third line of custom text that is displayed.
93	Custom Display Text Line 4	In display mode 1, this is the fourth line of custom text that is displayed.

Table 44: User Feedback String Keys

8.3. Joystick Reference

The SRC is a 6-axis controller with three on each hand. The X axis and Y axis are mapped to the thumb stick on top of the SRC, while the Z axis is mapped to the finger stick underneath.

© 2021, FORT Robotics. Company Confidential. Do not distribute.

Figure 17: SRC Joystick Axis Reference

Byte	Bits							
Byte	Bit 7	Bit 6	Bit 5	Bit 4	Bit 3	Bit 2	Bit 1	Bit 0
0	Axis Magnitude LSB's		Positive Status		Negative Status		Neutral Status	
1	Axis Magnitude MSB's							

Table 45: Packet Protocol Joystick Reference

Status	Definition
0x00	Not Set
0x01	Set
0x10	Error
0x11	Unavailable

Table 46: Packet Protocol Joystick Status Reference

8.4. Button Reference

The Buttons on the SRC are configured in a diamond. The buttons are referenced as those shown below on the left hand side of the controller: Up, Down, Left, Right.

Figure 18: SRC Joystick Button Reference

© 2021, FORT Robotics. Company Confidential. Do not distribute.

Byte	Bits							
Byte	Bit 7	Bit 6	Bit 5	Bit 4	Bit 3	Bit 2	Bit 1	Bit 0
0	Left Status		Up Status		Right Status		Down Status	

Table 47: SRC Joystick Button Reference

Status	Definition
0x00	Not Set
0x01	Set
0x10	Error
0x11	Unavailable

Table 48: SRC Joystick Button Status Reference

© 2021, FORT Robotics. Company Confidential. Do not distribute.

9. Interfacing using USB HID Device Protocol

When using the HID Game Controller Protocol, the device is implemented as a standard USB Human Interface Device. On most operating systems it will show up as a standard Game Controller device and can be used the same as any off-the-shelf USB game controller including a Logitech or XBOX Controller.

9.1. Packet Structure

The SRCS uses the standard HID device data bytes to transfer information about the measured status of the X, Y and Z-axis of a joystick, and the state of buttons. The SRCS uses custom raw data bytes to transfer the heartbeat and key-value pair information.

9.2. Message Types

Type	Description	Direction	Frequency
Input Report	Standard Message describing sticks and buttons	From SRC	~16 Hz

Table 49: Message Types

9.2.1. Input Report (From SRC)

The Input Report message from the SRC includes the 6 primary axes (Left X, Left Y, Left Z, Right X, Right Y, Right Z), 4-button Directional-Pad, the 4 numbered buttons, the state of the SRC, and the status of the E-STOP. HID class devices are encouraged, where possible, to use a right-handed coordinate system. If a user is facing a device, report values should increase as controls are moved from left to right (X), from far to near (Y) and from high to low (Z).

Byte Offset	Size (bits)	Description	Value
0	8	Left X Joystick Value	Increasing left to right from -127 to 127
1	8	Left Y Joystick Value	Increasing far to near from -127 to 127
2	8	Left Z Joystick Value	Increasing high to low from -127 to 127
3	8	Right X Joystick Value	Increasing left to right from -127 to 127
4	8	Right Y Joystick Value	Increasing far to near from -127 to 127
5	8	Right Z Joystick Value	Increasing high to low from -127 to 127
6.0	4	Directional-Pad	Increasing clockwise from Up (0-7) 0 = Up 2 = Right 4 = Down 6 = Left 8 = Not set
6.4	4	Numbered Buttons	Bit 1 = Button 1 Bit 2 = Button 2 Bit 3 = Button 3 Bit 4 = Button 4
7	1	SRC State	As described in Table 1
8	1	E-Stop Value	0 = Not Actuated 1 = Actuated

Table 50: Input Report from SRC

© 2021, FORT Robotics. Company Confidential. Do not distribute.

10. Regulatory Information

10.1. Power Output

The VSC-009-9XX is capable of transmitting at up to 1W. It is recommended that the transmit antenna be kept at least 23cm away from nearby persons to satisfy FCC RF exposure requirements. The VSC-009-24XX is capable of transmitting at up to 500mW. The antenna used must provide a separation distance of at least 20cm from all persons and must not be co-located or operate in conjunction with any other antenna or transmitter.

10.2. FCC Notifications

This device complies with part 15 of the FCC rules. Operation is subject to the following two conditions: 1) This device may not cause harmful interference and 2) this device must accept any interference received, including interference that may cause undesired operation.

10.3. IC Notifications

This device complies with Industry Canada license-exempt RSS standard(s). Operation is subject to the following two conditions: (1) this device many not cause interference, and (2) this device must accept any interference, including interference that many cause undesired operation of the device.

Ce dispositif est conforme aux norms permis-exemptes du Canada RSS d'industrie. L'opération est sujette aux deux conditions suivates: (1) ce dispositive peut ne pas l'interférence, et (2) ce dispositif doit accepter n'importe quelle interference, y compris l'interférence qui peut causer le fonctionnement peu desire du dispositif.

11. Ordering Information

Part Number	Description
VSC-009-(F)	Vehicle Safety Controller with 38999 Connectors and Integrated Safety Relays (F) = Radio Selection 901: 902-928MHz FHSS North America 1W 903: 915-928MHz FHSS Australia 1W **Obsolete** 2401: 2.4GHz FHSS 500mW (inquire for higher power)
VSC-006-(F)	Vehicle Safety Controller with Ecomate RM Connector and Integrated Safety Relays (F) = Radio Selection 901: 902-928MHz FHSS North America 1W 903: 915-928MHz FHSS Australia 1W **Obsolete** 2401: 2.4GHz FHSS 500mW (inquire for higher power)
VIC-004	USB interface cable with 6p 38999 for VSC-009
100-0167	36 inch pigtail I/O cable with 19p 38999 for VSC-009
100-0148	36 inch pigtail I/O cable with 19p Ecomate RM for VSC-006
100-0029	USB Cable, type A to mini-B, 3 ft for VSC-006
275-0002	Antenna, 900 MHz, RP-SMA, male
275-0003	Antenna, 2.4GHz, RP-SMA, male

Table 51 – VSC Orderable Part Numbers

© 2021, FORT Robotics. Company Confidential. Do not distribute.

12. Warranty Information

The End-User Agreement can be viewed here at https://fortrobotics.com/end-user-agreement/

The OEM Supply and License Agreement can be viewed here at https://fortrobotics.com/oem-agreement/

© 2021, FORT Robotics. Company Confidential. Do not distribute.

13. Revision History

Version	Date	Changes
A	3/1/2021	Initial Release
B	4/20/2021	Remove FMEDA Section
C	8/19/2021	Added Remote Status Message to CAN interface
D	4/28/2026	Marked 00x-903 Obsolete, removed obsolete trademark, updated branding

FORT Robotics
1608 Walnut Street
Floor 12
Philadelphia, PA 19103
(+1) 267-515-5880
fortrobotics.com

© 2021, FORT Robotics. Company Confidential. Do not distribute.